MIKSAN 100 2B EX SERIES EX-PROOF

3-Phase 400V 50Hz

Duty Type	: S1
Degree of protection	: IP65
Insulation Class	: F (155°C)
Mounting	: B5

ELECTRICAL DESIGN

Rated power(W)	: 4000
Speed(rpm)	: 2865
Rated current(A)	: 7,50
Torque –Mn(Nm)	: 13,20
Cos ϕ	: 0,88
Efficiency (%)	: 85,8

LOCKED ROTOR TORQUE

Locked rotor Current– Ia(A)	: 57,00
Ia / In	: 7,6
Locked rotor Torque- Ma(Nm)	: 35,64
Ma / Mn	: 2,7

MECHANICAL DESIGN

Frame	: Aluminum
End Shields	: Aluminum
Terminal Box	: Aluminum
Cable gland	: M20x1,5 EX

BEARING ARRANGEMENT

Drive End	
6206 ZZ C3	
Non Drive End	
6206 ZZ C3	

Paint	: None
Weight	: 23,7 kg

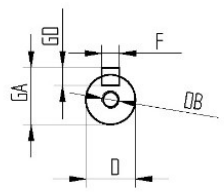

B3-B6-B7-B8-V5-V6

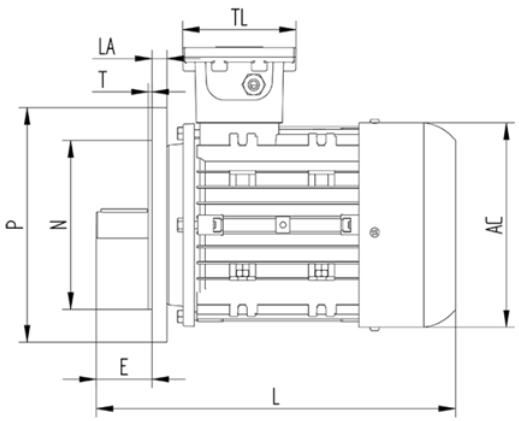

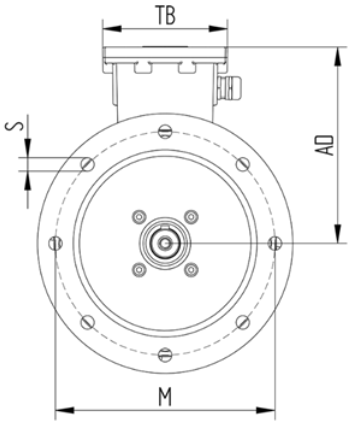

L	P	N	M	T	øAC	LA	S	AD	TB/TL	E	øD	øDB	GA	FxGD
отр	нрл	мул	нмр	4.0	194	16.0	13	174	122	60	28	M10	31	8x8

IEP 16 ATEX 0433X

II 2G Ex db IIC T4 Gb

II 2D Ex tb IIIC T120°C Db,IP65