MIKSAN 112 2B IE3 EX SERIES EX-PROOF

3-Phase 400V 50Hz

Duty Type	: S1
Degree of protec on	: IP65
Insula on Class	: F (155°C)
Moun ng	: B5

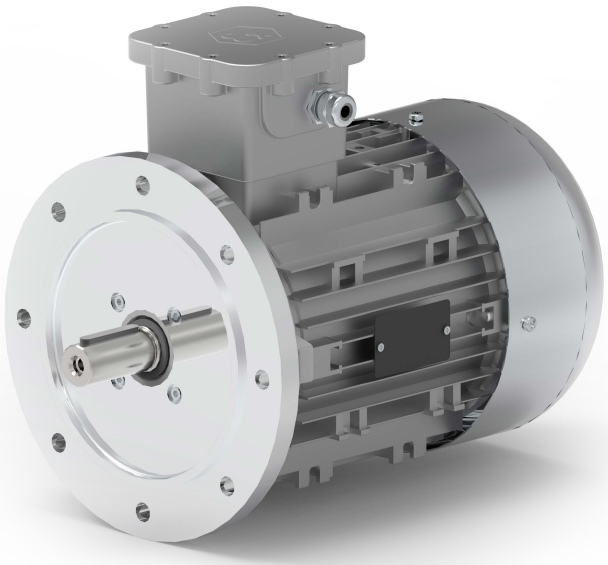

ELECTRICAL DESIGN

Rated power(W)	: 5500
Speed(rpm)	: 2890
Rated current(A)	: 9,80
Torque –Mn(Nm)	: 17,80
Cos ϕ	: 0,90
Efficiency (%)	: 89,2

LOCKED ROTOR TORQUE

Locked rotor Current– Ia(A)	: 71,54
Ia / In	: 7,3
Locked rotor Torque- Ma(Nm)	: 37,38
Ma / Mn	: 2,1

MECHANICAL DESIGN

Frame	: Aluminum
End Shields	: Aluminum
Terminal Box	: Aluminum
Cable gland	: M20x1,5 EX

BEARING ARRANGEMENT

Drive End	
6206 ZZ C3	
Non Drive End	
6206 ZZ C3	

Paint	: None
Weight	: 33,2 kg

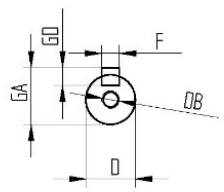

B3-B6-B7-B8-V5-V6

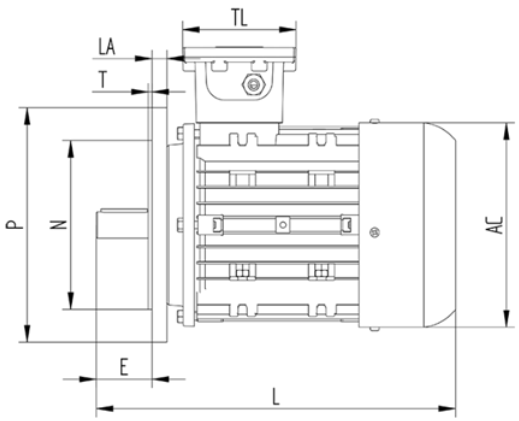

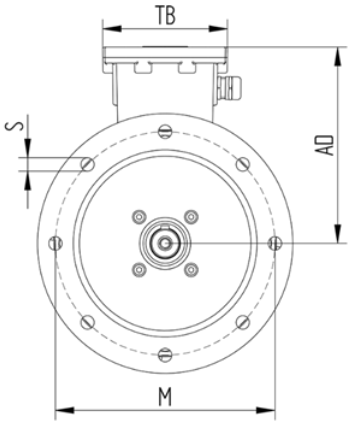

L	P	N	M	T	øAC	LA	S	AD	TB/TL	E	øD	øDB	GA	FxGD
387	250	180	215	4.0	218	16.0	13	190	122	60	28	M10	31	8x8

IEP 16 ATEX 0433X

II 2G Ex db IIC T4 Gb

II 2D Ex tb IIIC T120°C Db,IP65