MIKSAN 80 2A IE3 EX SERIES EX-PROOF

3-Phase 400V 50Hz

Duty Type	: S1
Degree of protection	: IP65
Insulation Class	: F (155°C)
Mounting	: B5

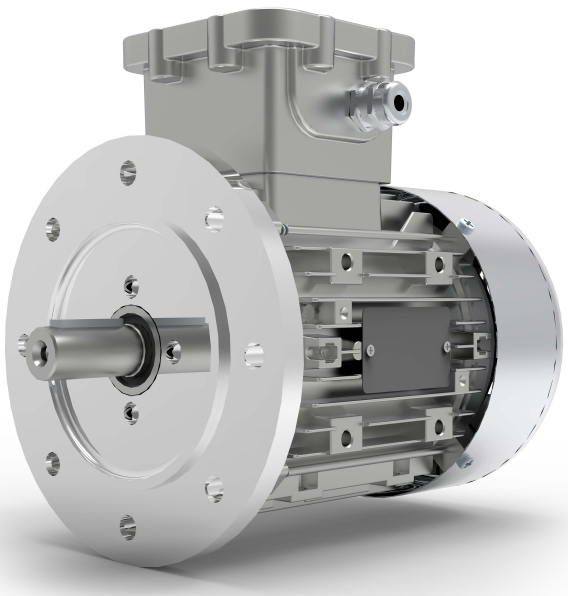

ELECTRICAL DESIGN

Rated power(W)	: 750
Speed(rpm)	: 2800
Rated current(A)	: 1,85
Torque –Mn(Nm)	: 2,50
Cos ϕ	: 0,82
Efficiency (%)	: 80,7

LOCKED ROTOR TORQUE

Locked rotor Current– Ia(A)	: 8,88
Ia / In	: 4,8
Locked rotor Torque- Ma(Nm)	: 8,00
Ma / Mn	: 3,2

MECHANICAL DESIGN

Frame	: Aluminum
End Shields	: Aluminum
Terminal Box	: Aluminum
Cable gland	: M20x1,5 EX

BEARING ARRANGEMENT

Drive End	
6204 ZZ C3	
Non Drive End	
6204 ZZ C3	

Paint	: None
Weight	: 9,8 kg

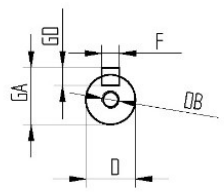

B3-B6-B7-B8-V5-V6

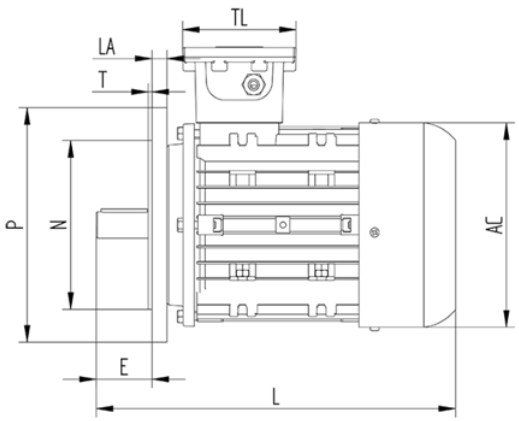

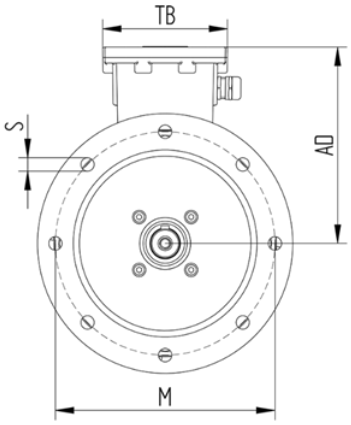

L	P	N	M	T	øAC	LA	S	AD	TB/TL	E	øD	øDB	GA	FxGD
273	200	130	165	3.5	157	12.0	12	156	122	40	19	M6	21.5	6x6

IEP 16 ATEX 0433X

II 2G Ex db IIC T4 Gb

II 2D Ex tb IIIC T120°C Db,IP65