## MIKSAN 80 2B EX SERIES EX-PROOF

3-Phase 400V 50Hz

| | |
|---|---|
| Duty Type | : S1 |
| Degree of protection | : IP65 |
| Insulation Class | : F (155°C) |
| Mounting | : B5 |

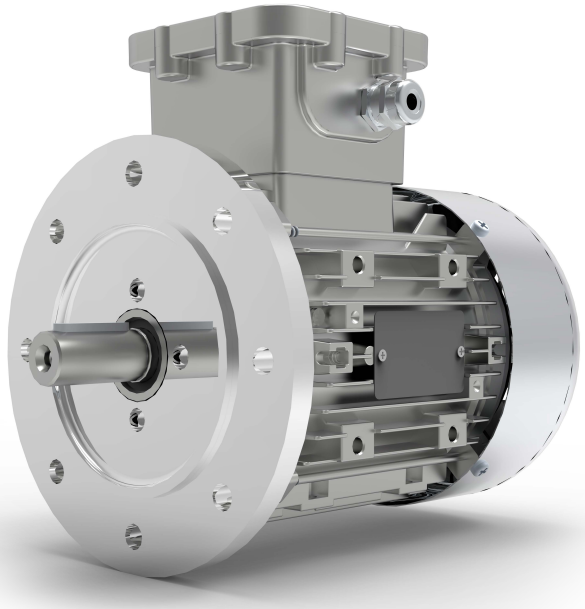

## ELECTRICAL DESIGN

| | |
|---|---|
| Rated power(W) | : 1100 |
| Speed(rpm) | : 2790 |
| Rated current(A) | : 2,60 |
| Torque –Mn(Nm) | : 3,80 |
| Cos ϕ | : 0,83 |
| Efficiency (%) | : 79,6 |

## LOCKED ROTOR TORQUE

| | |
|---|---|
| Locked rotor Current– Ia(A) | : 13,00 |
| Ia / In | : 5,0 |
| Locked rotor Torque- Ma(Nm) | : 9,50 |
| Ma / Mn | : 2,5 |

## MECHANICAL DESIGN

| | |
|---|---|
| Frame | : Aluminum |
| End Shields | : Aluminum |
| Terminal Box | : Aluminum |
| Cable gland | : M20x1,5 EX |

## BEARING ARRANGEMENT

| | |
|---|---|
| Drive End | |
| 6204 ZZ C3 | |
| Non Drive End | |
| 6204 ZZ C3 | |

| | |
|---|---|
| Paint | : None |
| Weight | : 10,2 kg |

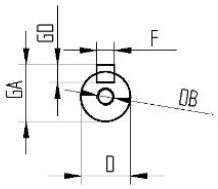


B3-B6-B7-B8-V5-V6

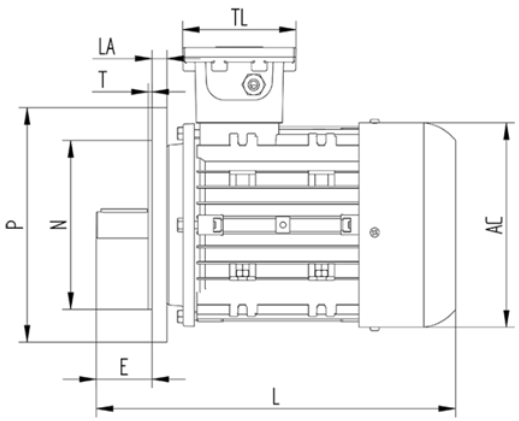


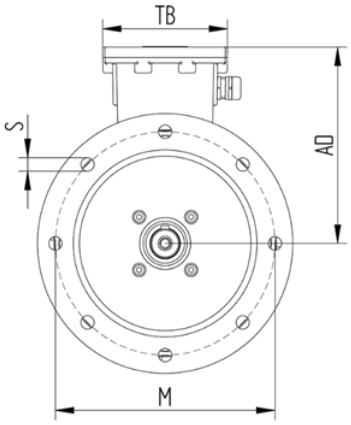


| L | P | N | M | T | øAC | LA | S | AD | TB/TL | E | øD | øDB | GA | FxGD |
|---|---|---|---|---|---|---|---|---|---|---|---|---|---|---|
| нто | нлл | мол | мср | оφр | мрт | 1н.0 | 1н | мрс | 122 | пл | мф | Мс | нмφр | сЕс |

IEP 16 ATEX 0433X

II 2G Ex db IIC T4 Gb

II 2D Ex tb IIIC T120°C Db,IP65