MIKSAN 80 2B IE3 EX SERIES EX-PROOF

3-Phase 400V 50Hz

Duty Type	: S1
Degree of protection	: IP65
Insulation Class	: F (155°C)
Mounting	: B5

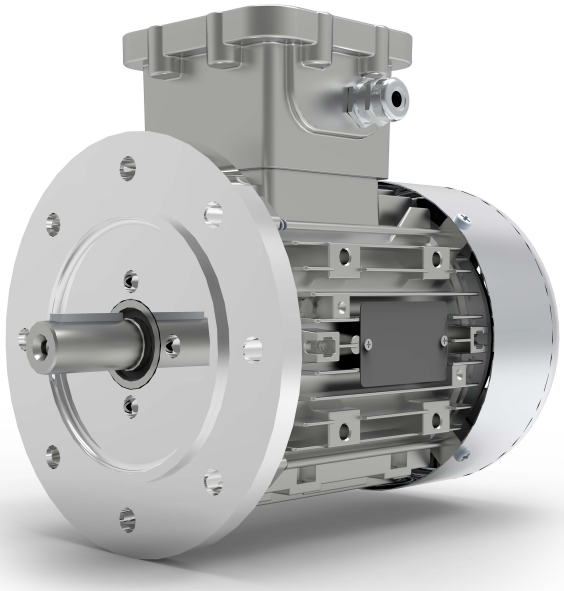

ELECTRICAL DESIGN

Rated power(W)	: 1100
Speed(rpm)	: 2790
Rated current(A)	: 2,60
Torque –Mn(Nm)	: 3,80
Cos ϕ	: 0,83
Efficiency (%)	: 82,7

LOCKED ROTOR TORQUE

Locked rotor Current– Ia(A)	: 13,00
Ia / In	: 5,0
Locked rotor Torque- Ma(Nm)	: 9,50
Ma / Mn	: 2,5

MECHANICAL DESIGN

Frame	: Aluminum
End Shields	: Aluminum
Terminal Box	: Aluminum
Cable gland	: M20x1,5 EX

BEARING ARRANGEMENT

Drive End	
6204 ZZ C3	
Non Drive End	
6204 ZZ C3	

Paint	: None
Weight	: 10,9 kg

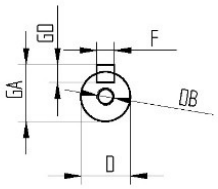

B3-B6-B7-B8-V5-V6

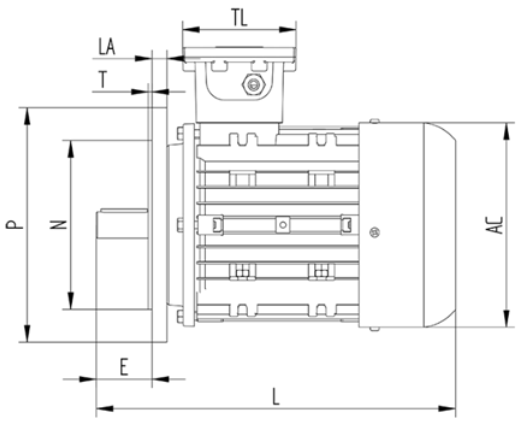

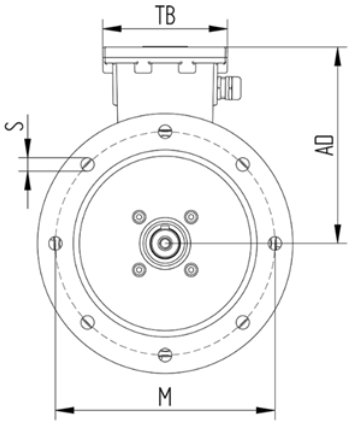

L	P	N	M	T	øAC	LA	S	AD	TB/TL	E	øD	øDB	GA	FxGD
нто	нлл	мол	мср	оφр	мрт	1н.0	1н	мрс	122	пл	мф	Мс	нмφр	сӖс

IEP 16 ATEX 0433X

II 2G Ex db IIC T4 Gb

II 2D Ex tb IIIC T120°C Db,IP65